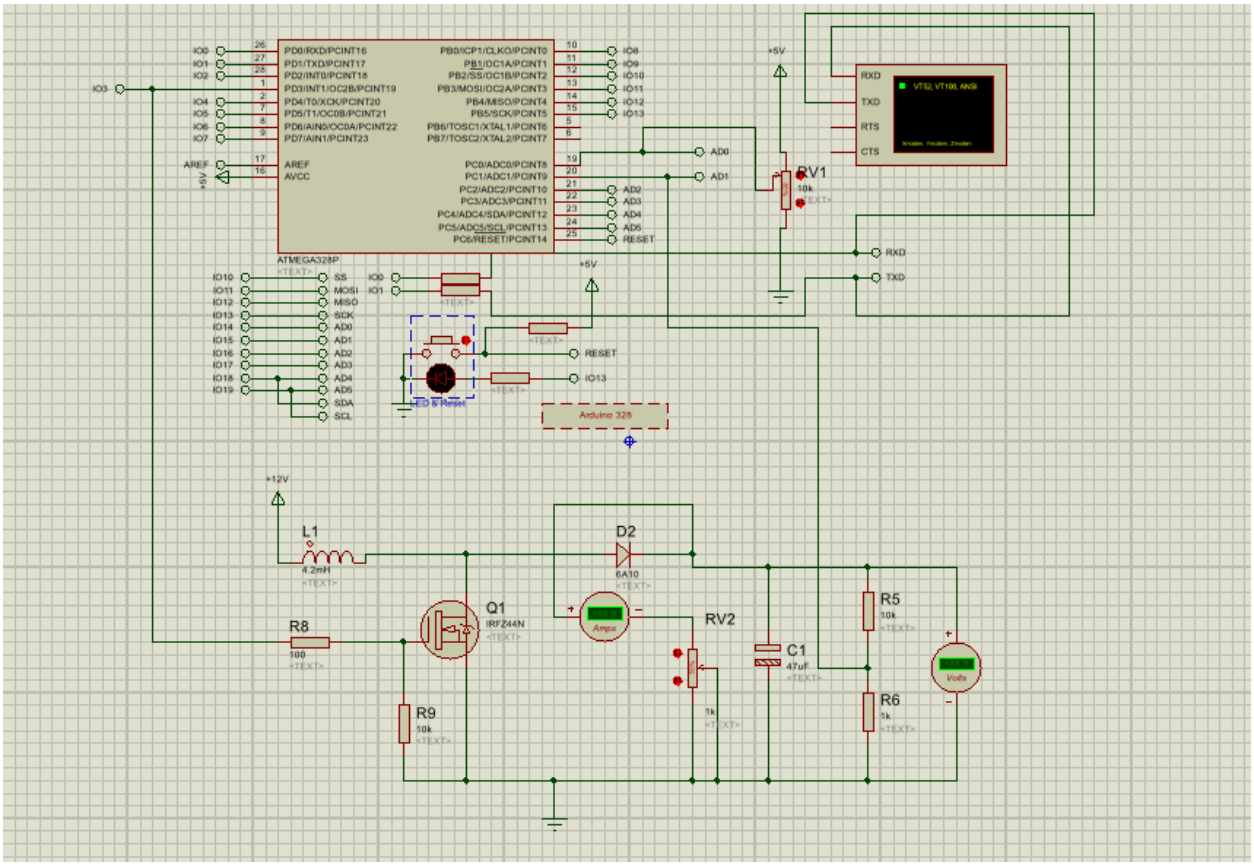

Fig. The circuit Configuration

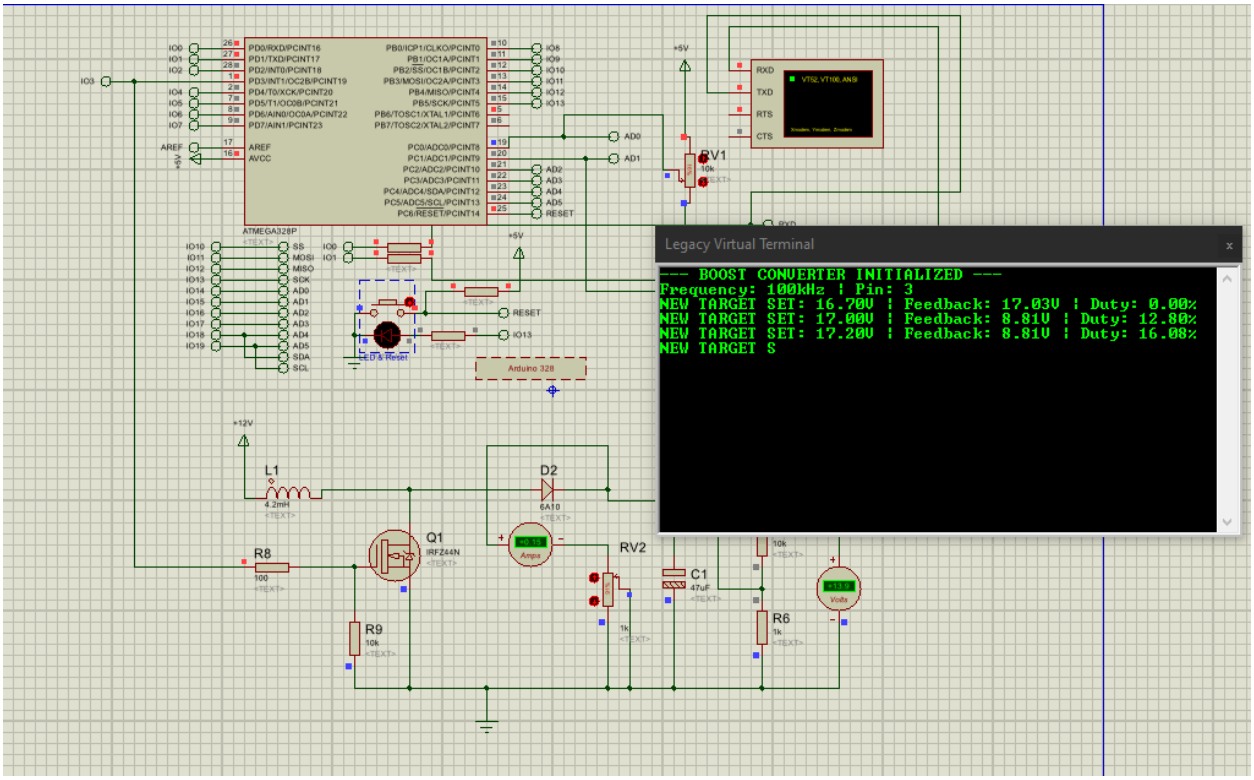

Fig. The circuit after simulation.